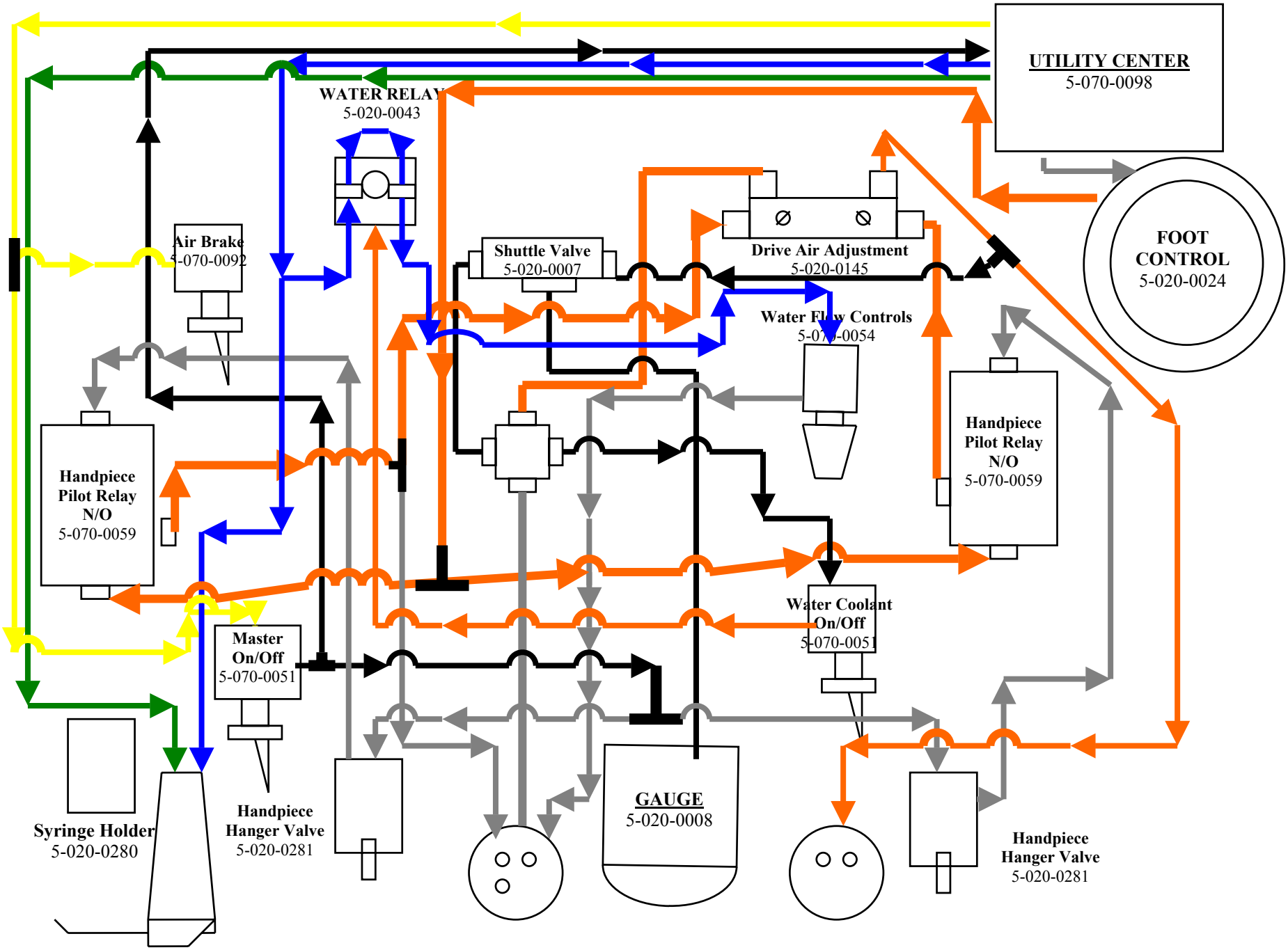1405 XL Hygiene Series