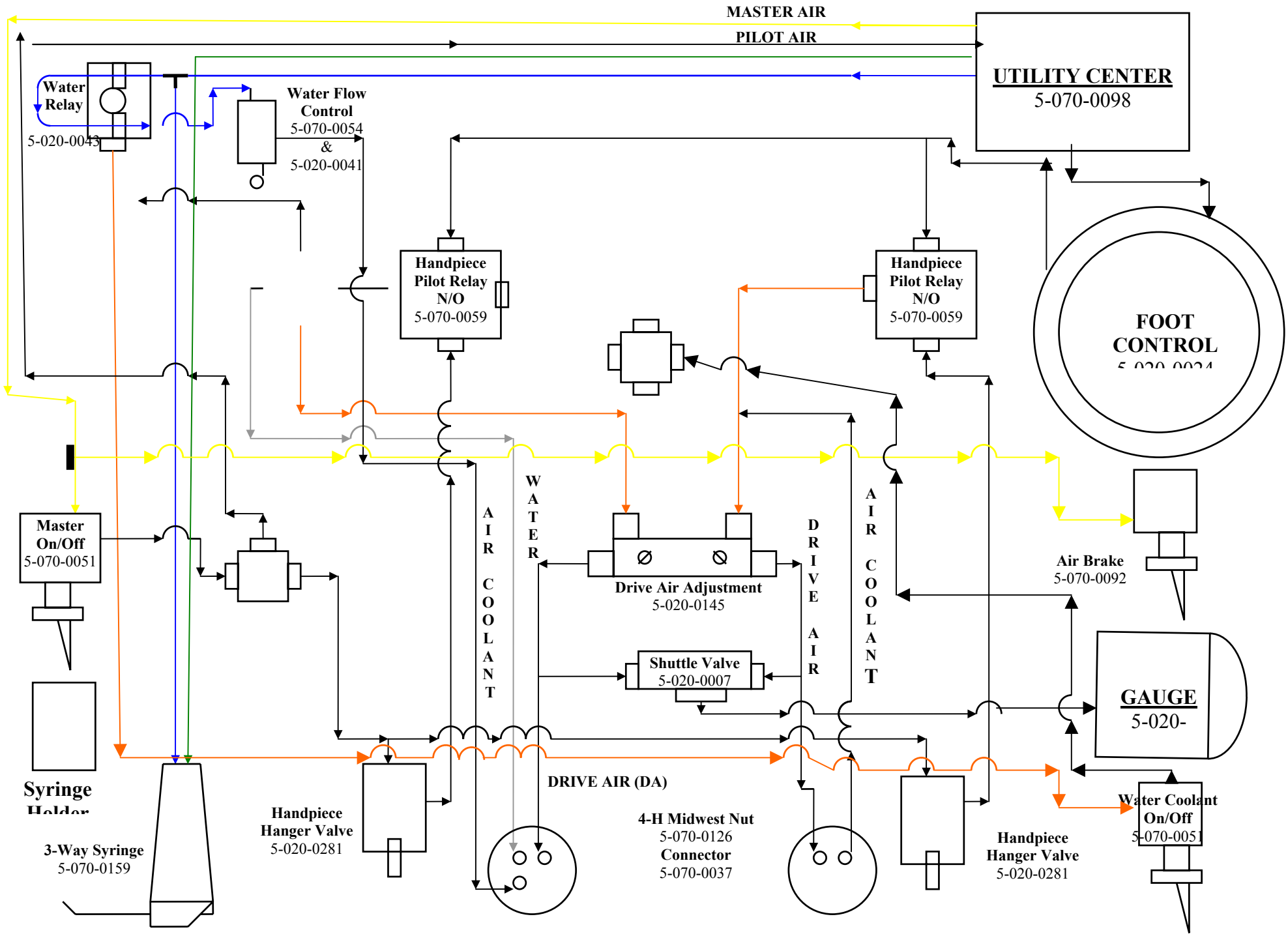
MASTER AIR
PILOT AIR
UTILITY CENTER
5-070-0098
Water Relay
5-020-0043
Water Flow Control
5-070-0054
&
5-020-0041
Handpiece Pilot Relay N/O
5-070-0059
Handpiece Pilot Relay N/O
5-070-0059
FOOT CONTROL
Master On/Off
5-070-0051
AIR COOLANT
WATER
DRIVE AIR
AIR COOLANT
Drive Air Adjustment
5-020-0145
Air Brake
5-070-0092
Shuttle Valve
5-020-0007
GAUGE
5-020-
Syringe Holder
DRIVE AIR (DA)
Handpiece Hanger Valve
5-020-0281
4-H Midwest Nut
5-070-0126
Connector
5-070-0037
Handpiece Hanger Valve
5-020-0281
Water Coolant On/Off
5-070-0051
3-Way Syringe
5-070-0159